EKOTOMTARNA FINAL PRESENTATION

INSPIRATION

•NASAs Dragonfly mission (it will be a lander that studies Saturn's moon Titan)

SECONDARY MISSION

Our CanSat's secondary mission tried to demonstrate autonomous control during descent by

using sensor data to estimate orientation and stabilize its movement, validating both our custom hardware and control algorithms.

Fold arms correctly -> maintain upright orientation throughout descent phase -> start the drone motors succesfully -> throughout the whole mission collect, send and save data and process it to help the droneSat to navigate autonomously back to the set homepoint. -> make a soft landing.

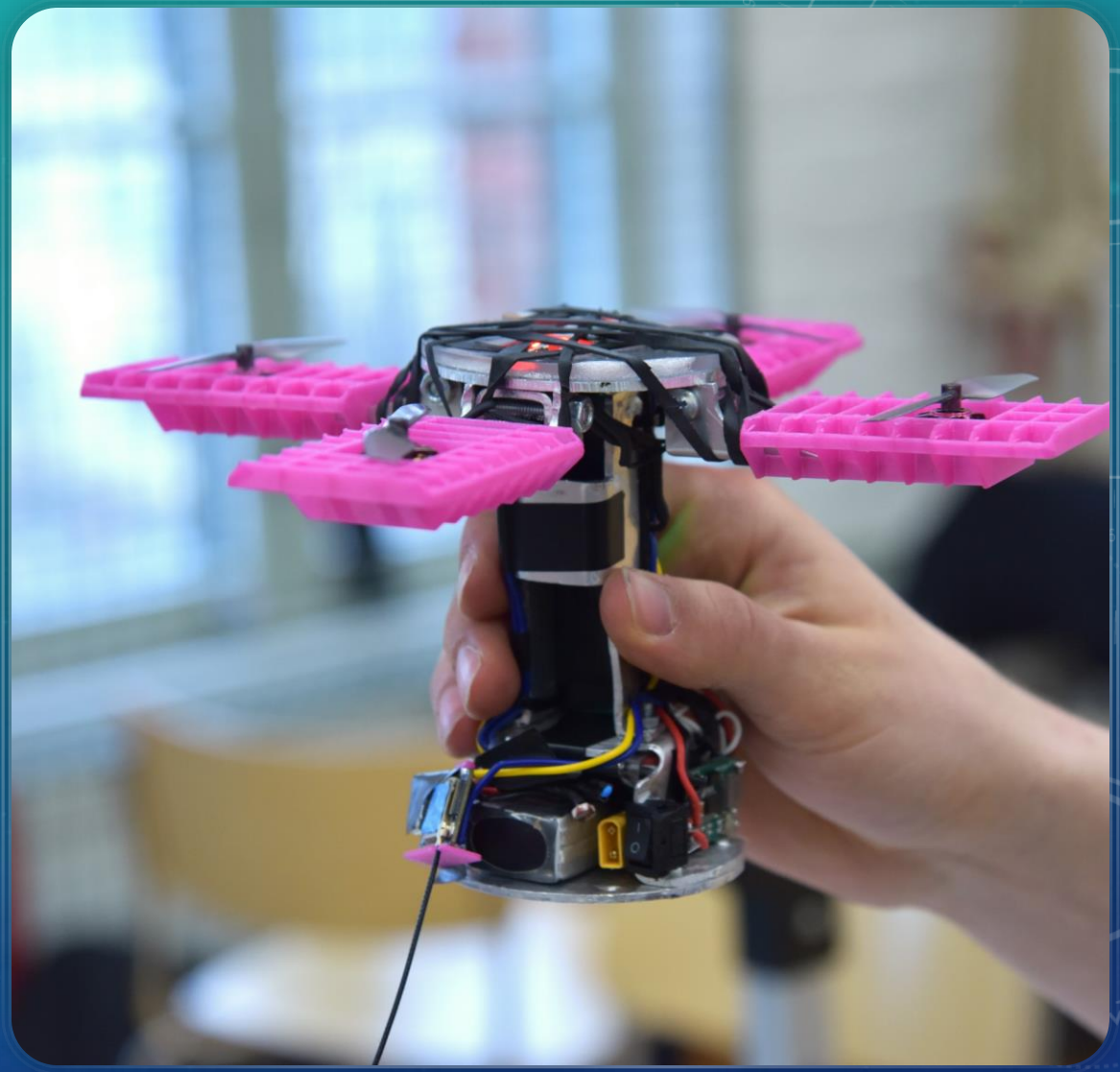

MECHANICAL DESIGN

- Frame constructed from 2mm sheet aluminum
- Held together with pop rivets and bolts
- 3D printed PETG grid fins
- Grounded frame to improve gps performance

ELECTRONICS DESIGN

- Tonttuboard = Custom PCB with 6x IMU, flash chip, barometer and a place for teensy 4.0, thermistor and ldr
- The flash chip is more complex to use but it should handle the high-G launch environment better
- The board is simple by design; it has for example no converters or radio or GNSS-module
- We had 2x 7.4 2s lipos and a buck converter to convert the voltage to 5 V for the electronics. We had 4x Blheli_s esc:s to control the 11000 kv motors

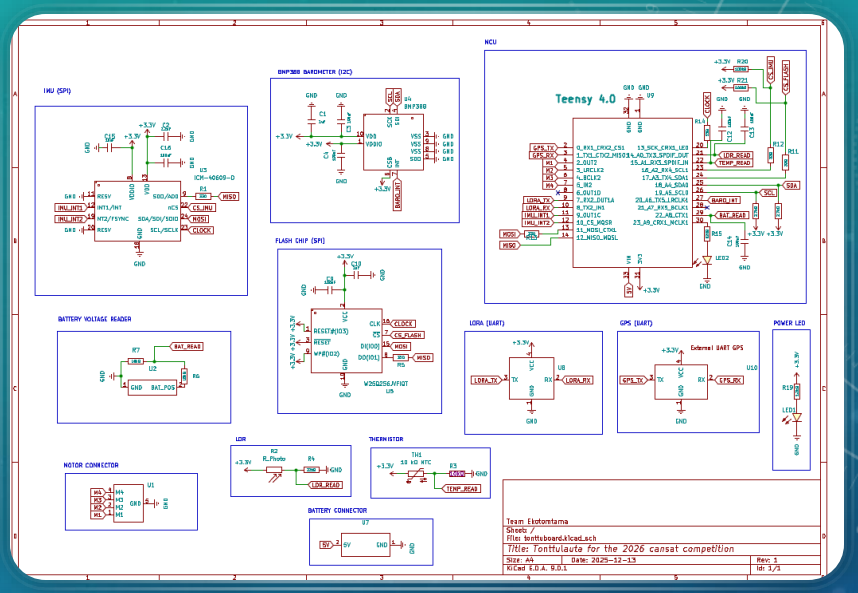

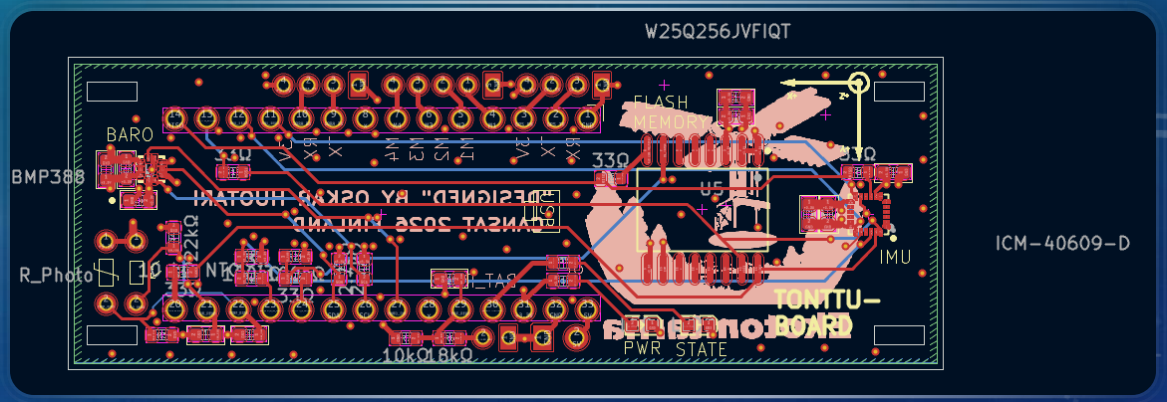

SOFTWARE DESIGN

- We wrote a custom autonomous plus-frame quadrotor unmanned aerial vehicle flight control system Oskar also wrote a custom library for our custom PCB called "TonttuLib”.
- The software collected data through TonttuLib's API and then filtered it through many low-pass filters and a lightly modified simple complementary filter, from which we got roll, pitch, and yaw. After that, the data was sent to a cascaded PID system (this is two nested PID loops "angle" and "rate" which work with different data and frequency), which also gets some setpoints from GPS PIDs and the base thrust from velocity PIDs. We also had a state machine that correctly detected launch, deployment, and ground
- Almost 8000 lines of code

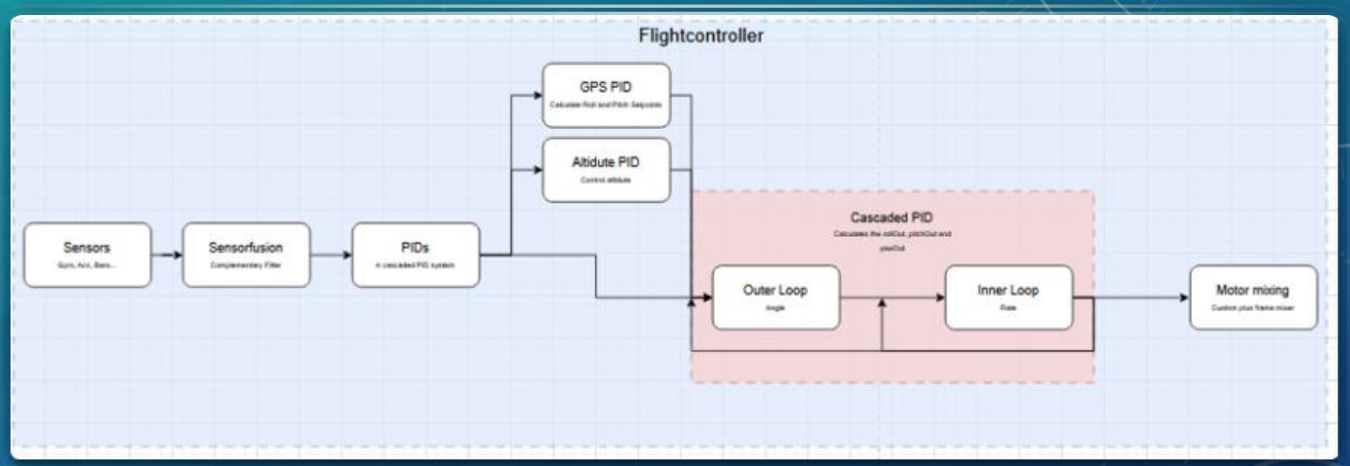

SOFTWARE AND GROUND STATION DESIGN

- Esp32s3 sense talks with the flight computer two-way via UART
- Send data esp now protocol
- Esp32 with a self made yagi antenna
- Proven max distance: 3,5 km (last year’s cansat)
- Send commands from ground to drone
- Get data from satelite

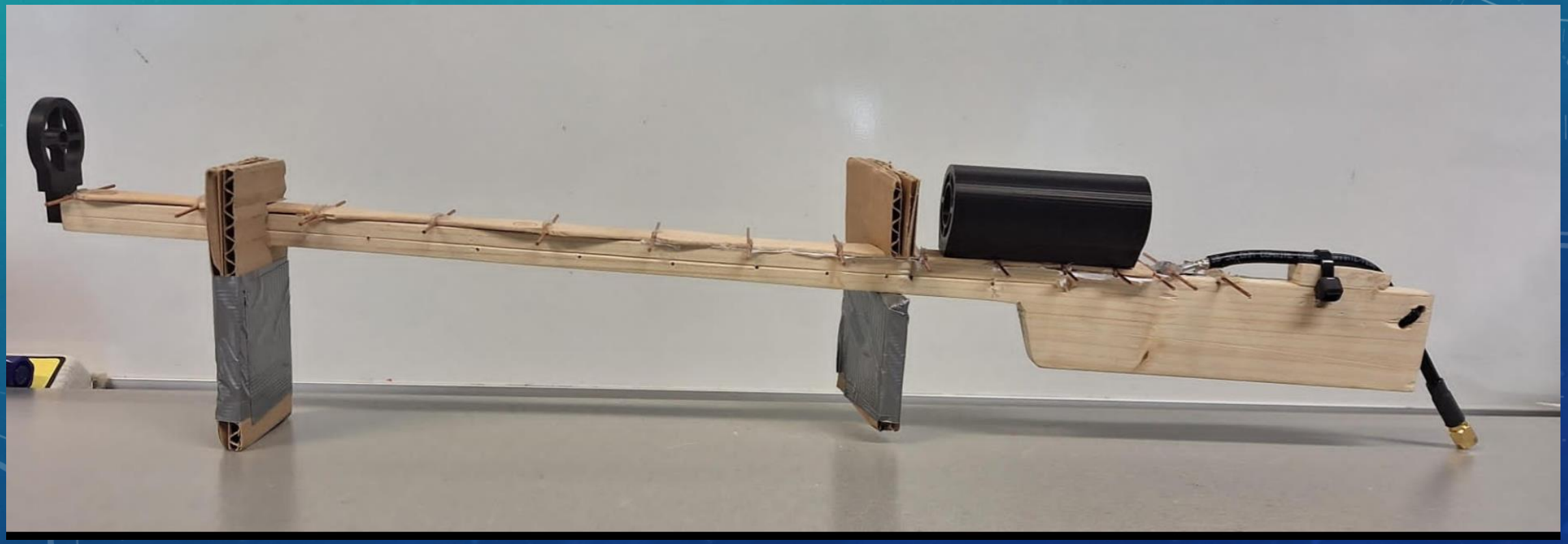

ANALYZING THE LAUNCH

- Launch went well and the data transmission worked while the drone was inside the rocket.
- Sadly when ejected out of the rocket our, DroneSat turned off and it turned on back when it was in ground, so it missed the whole flight (probably due to a loose reset button)
- One motor arm detached in flight

THE DATA FROM THE LAUNCH

- Pressure goes down when cansat goes up
- Mud was 7.7 degrees Celsius after our launch
- The rocket spun
- There was no light in the rocket
- The rocket's acceleration was at least over 8 g during launch

ALTITUDE CALCULATED BY AIR PRESSURE

- Our Cansat's descent rate was around 20-30 m/s (rough estimate because descent time isn't accurate).

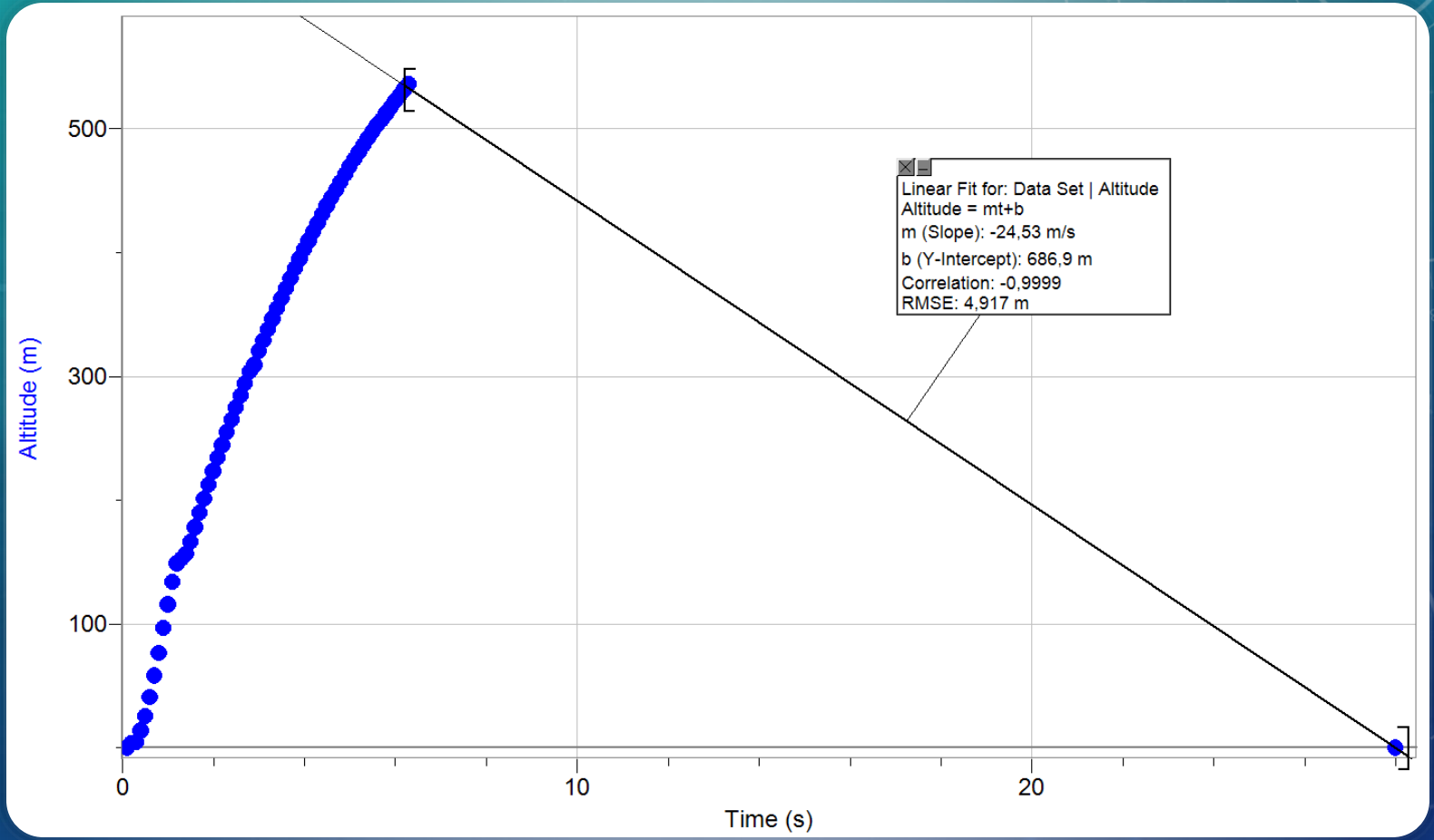

TEMPERATURE (THE TIME IS ESTIMATED)

- We had temperature from inside the rocket during liftoff (27 ^{o}C).
- Second temperature data point was from the field's mud (7,7 ^{o}C).
- Temperature should be the lowest at the apogee and should increase during descent.

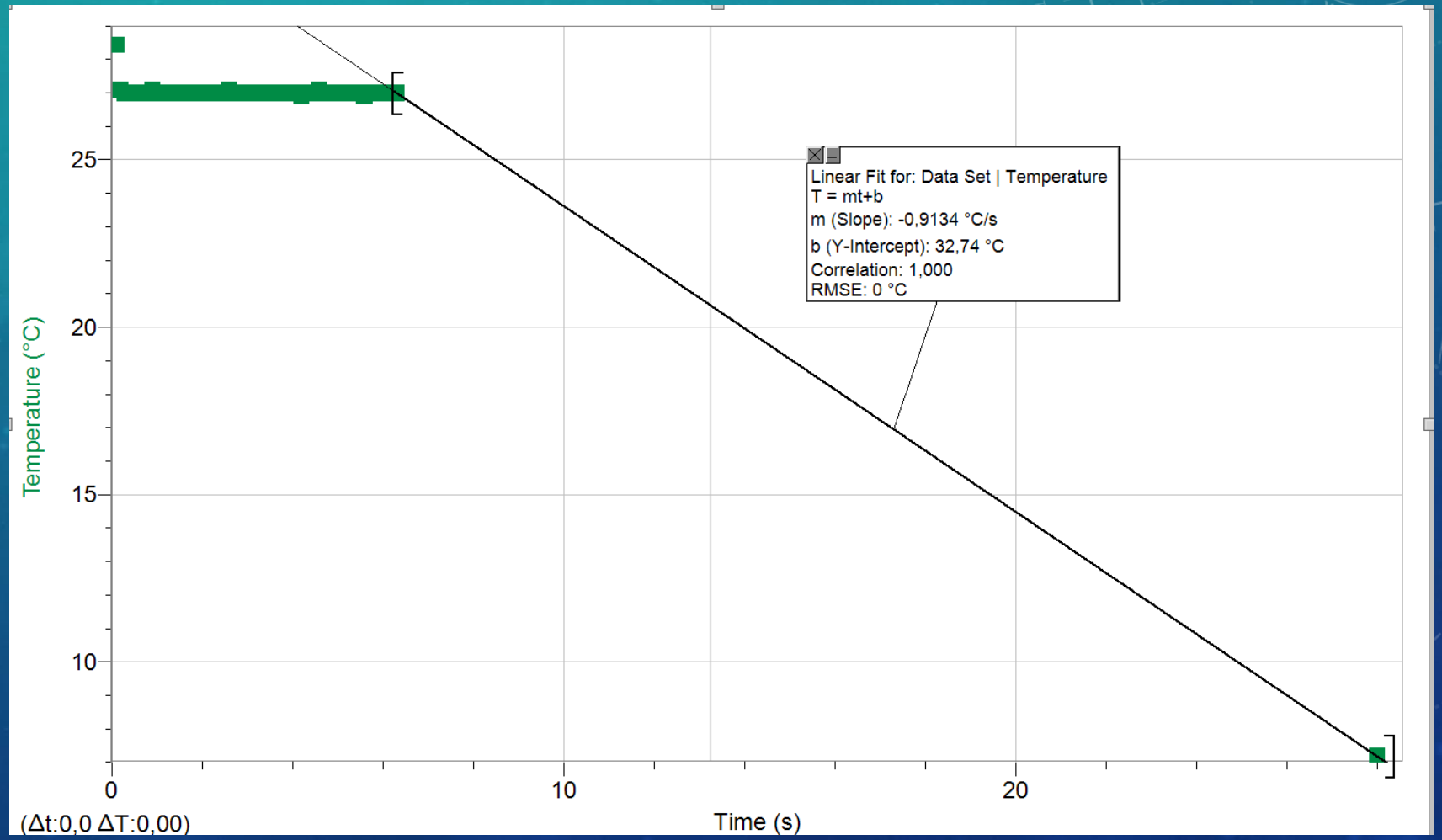

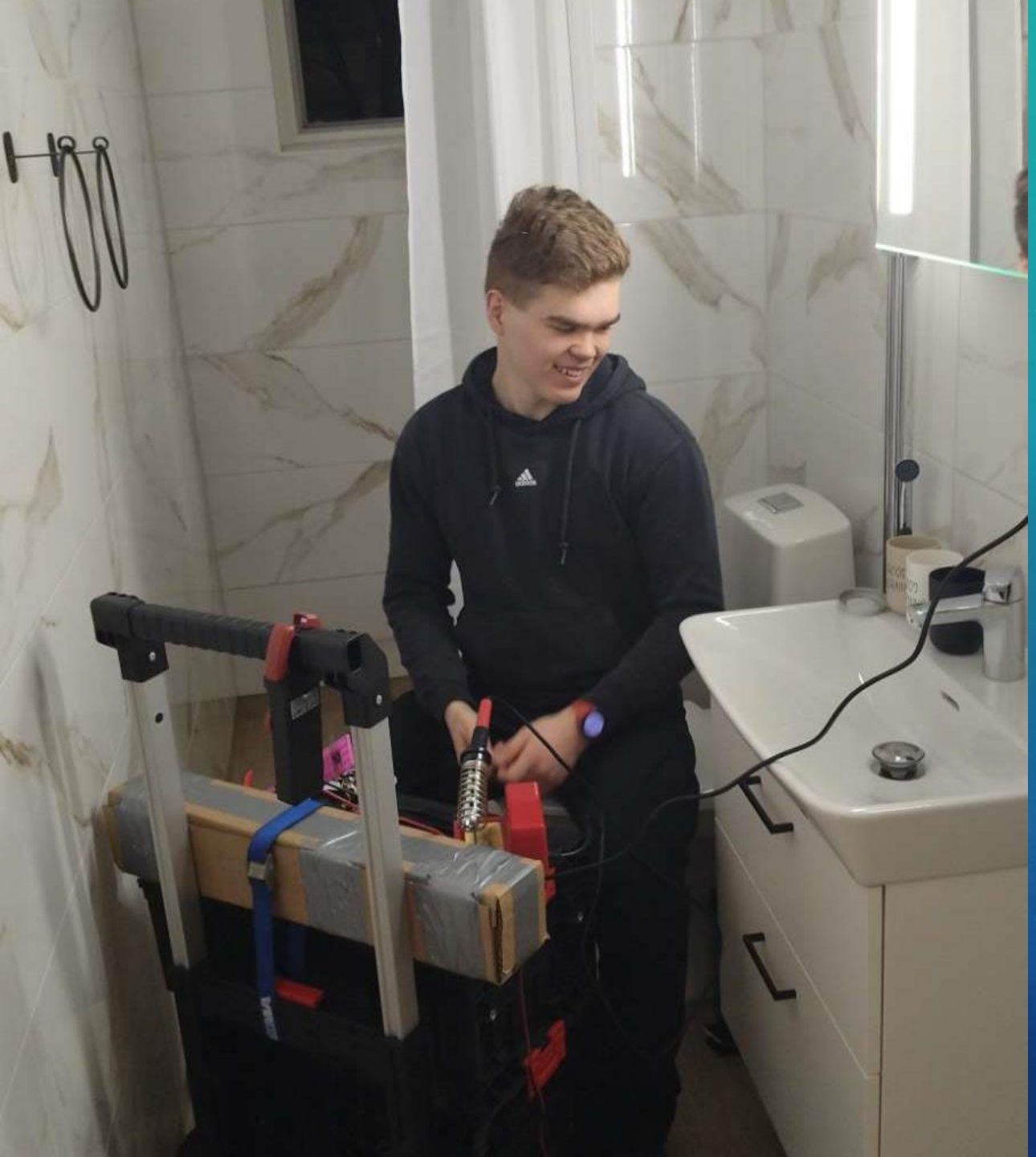

WHAT WORKED

- State machine
- Aleksi
- Kebab
- Tonttulib
- Tonttuboard (almost)
- All the tools.

WHAT DIDN’T WORK

- Teensy's reset button (or it worked a bit too well?)
- Pop rivets (motor arm came off)
- Our will to live
- Components:
  - We broke 5x ESCs
  - We broke 3x XIAO Esp32s3 (one was soldered accidentally to 7.4 volts, one was maybe shorted to our frame and the third just quit)
  - We burned 1x tonttuboard, dremlled and shorted 1x, see next slide
  - One lipo was hissing
  - Propellers have flown out and attacked us
  - Gridfins broke
  - One data cable burned itself.
  - Our camera killed itself
  - One motor is just strange
  - Our buck converter let out it's magic smoke (we couldn't put it back in)
  - One of the motor arms got ripped out durning the deployment
  - Neo7m didn't cooperate with us

LESSONS LEARNED

- Koko streetkitchen is place to be
- Always remove your reset-buttons for high-G flights
- Avoid XIAO ESPs at all costs
- The best code is written just before launch with no sleep
- Motor mixing is a one of those rare things that just make sense

OUTREACH

- 99 followers on Instagram
- 13,4 k views in the most famous reel.
- Article in Keski-Uusimaa (local newspaper)

THANK YOU!

- https://github.com/swadyx/kansatti2
- https://github.com/oskarhuotari/Tonttulib
- https://github.com/oskarhuotari/Tonttuboard-PCB